Menu

PENTAIR

9203 Cast Iron and Stainless Steel Series

L-0300AG-2
Rev. B

HYPRO®

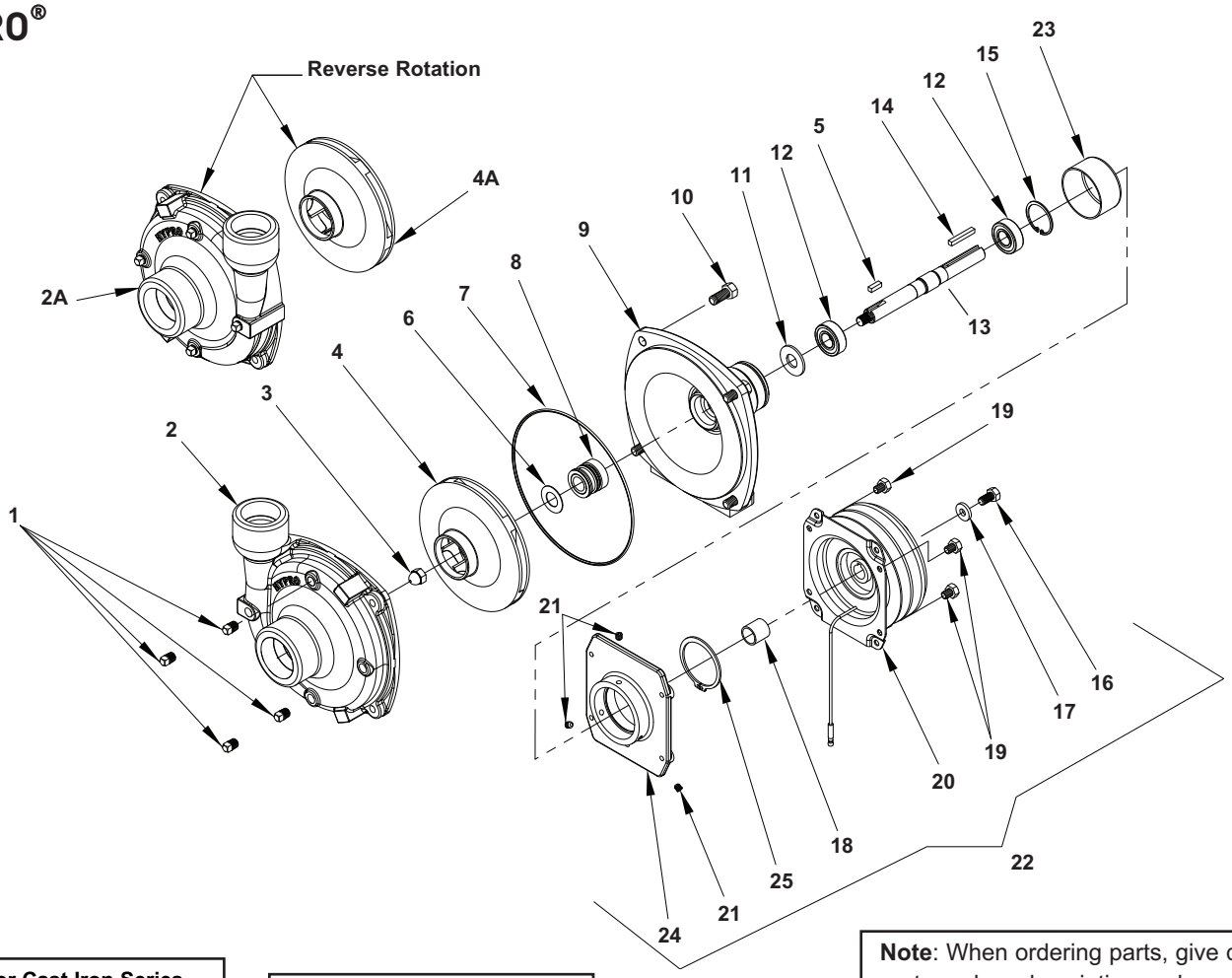

Seal Kit for Cast Iron Series No. 3430-0332 Consists of: (1) Ref. 7 O-ring, (1) Ref. 8 Mechanical Seal, and (1) Ref. 6 Gasket

Seal Kit for Stainless Series No. 3430-0589 Consists of: (1) Ref. 7 O-ring and (1) Ref. 8 Mechanical Seal

Note: When ordering parts, give quantity, part number, description and complete model number. Reference numbers are used ONLY to identify parts in the drawing and NOT to be used as order numbers.

Ref. No.	Qty. Req'd.	Part No.	Description
1	4	2406-0007	Drain Plug (Cast series)
1	4	2406-0016	Drain Plug (316 Stainless series)
2	1	0150-9000C	Pump Casing (Cast series)
2	1	0150-9000S	Pump Casing (316 Stainless series)
2A	1	0152-9000C	Pump Casing -Reverse (Cast series)
2A	1	0152-9000S	Pump Casing -Reverse (Stainless series)
3	1	2253-0002	Impeller Nut (Cast series)
3	1	2253-0006	Impeller Nut (316 Stainless series)
4	1	0401-9100P	Impeller (Model 9203C) - Nylon
4	1	0402-9100P	Impeller (Model 9203S) - Poly
4A	1	0404-9100P	Impeller -Reverse (Cast series) - Nylon
4A	1	0403-9100P	Impeller -Reverse (Stainless series) - Poly
5	1	1610-0015	Key (Cast series)
5	1	1610-0044	Key (Stainless series)
6	1	1700-0100	Gasket
7	1	1720-0083	O-ring
8	1	2120-0008	Mechanical Seal (Optional Buna-N)
8	1	2120-0009	Mechanical Seal (Cast series)
8	1	3430-0589	Mechanical Seal (Silicon Carbide) (Stainless) Includes Ref. #7 O-ring

Ref. No.	Qty. Req'd.	Part No.	Description
9	1	0750-9200C3	Mounting Flange (Cast series)
9	1	0756-9200S	Mounting Flange (Stainless series)
10	4	2210-0020	Bolt (Cast series)
10	4	2210-0125	Bolt (Stainless series)
11	1	1410-0056	Slinger Ring
12	2	2000-0010	Ball Bearing
13	1	0505-9200	Pump Shaft
14	1	1610-0004	Key
15	1	1820-0013	Bearing Retainer
16	1	2210-0003	Bolt
17	1	2270-0092	Retaining Washer
18	1	1410-0107	Spacer
19	4	N/A	Bolt (part of clutch assy.) 1/4" x 3/8"
20	1	2526-0012	Clutch
21	3	2230-0001	Set Screw
22	1	3430-0592	Clutch Kit
23	1	2300-0025	Protective Cover
24	1	0753-9200C	Mounting Bracket
25	1	1810-0036	Retaining Ring

⚠ **California Proposition 65 Warning** -- This product and related accessories contain chemicals known to the State of California to cause cancer, birth defects or other reproductive harm.

ALL 9203 SERIES		GPM at	HP	GPM at	HP	GPM at	HP	GPM at	HP	GPM at	HP	GPM at	HP	GPM at	HP	GPM at	HP
	RPM	10 PSI		20 PSI		40 PSI		60 PSI		80 PSI		100 PSI		120 PSI		140 PSI	
	2400	80	1.9	65	1.8	26	1.3										
	3600	105	5.3	105	5.3	92	5.0	50	3.7								
	4200	122	8.2	120	7.9	115	7.7	98	7.1	56	5.3						
	5000	140	12.6	140	12.6	138	12.6	130	12.2	118	11.6	88	9.9	45	7.2		
	5500	140	14.9	140	14.9	138	14.9	135	15.2	130	15.2	118	14.4	90	12.5	60	9.8
	6000	140	17.1	140	17.1	140	17.5	140	18.0	135	18.2	130	18	125	18.2	100	16.3

ALL 9203 SERIES		LPM at	HP	LPM at	HP	LPM at	HP	LPM at	HP	LPM at	HP	LPM at	HP	LPM at	HP	LPM at	HP
	RPM	0.7 BAR		1.4 BAR		2.8 BAR		4.1 BAR		5.5 BAR		6.9 BAR		8.3 BAR		9.7 BAR	
	2400	303	1.9	246	1.8	98	1.3										
	3600	397	5.3	397	5.3	348	5.0	189	3.7								
	4200	462	8.2	454	7.9	435	7.7	371	7.1	212	5.3						
	5000	530	12.6	530	12.6	522	12.6	492	12.2	447	11.6	333	9.9	170	7.2		
	5500	530	14.9	530	14.9	522	14.9	511	15.2	492	15.2	447	14.4	341	12.5	227	9.8
	6000	530	17.1	530	17.1	530	17.5	530	18.0	511	18.2	492	18	473	18.2	379	16.3

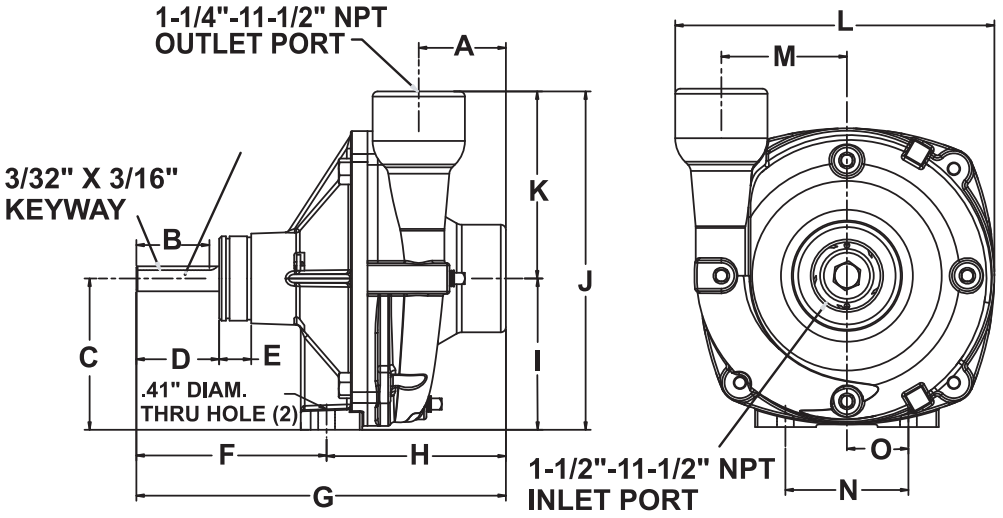

9203C

Dimensions		
	Inches	mm
A	2.13	54
B	1.78	45.2
C	3.69	93.7
D	2.02	51.3
E	0.78	19.9
F	4.64	117.8
G	9.01	228.9
H	4.37	111.1
I	3.69	93.7
J	8.25	209.6
K	4.56	115.9
L	7.78	197.7
M	3.06	77.8
N	3	76.2
O	1.5	38.1

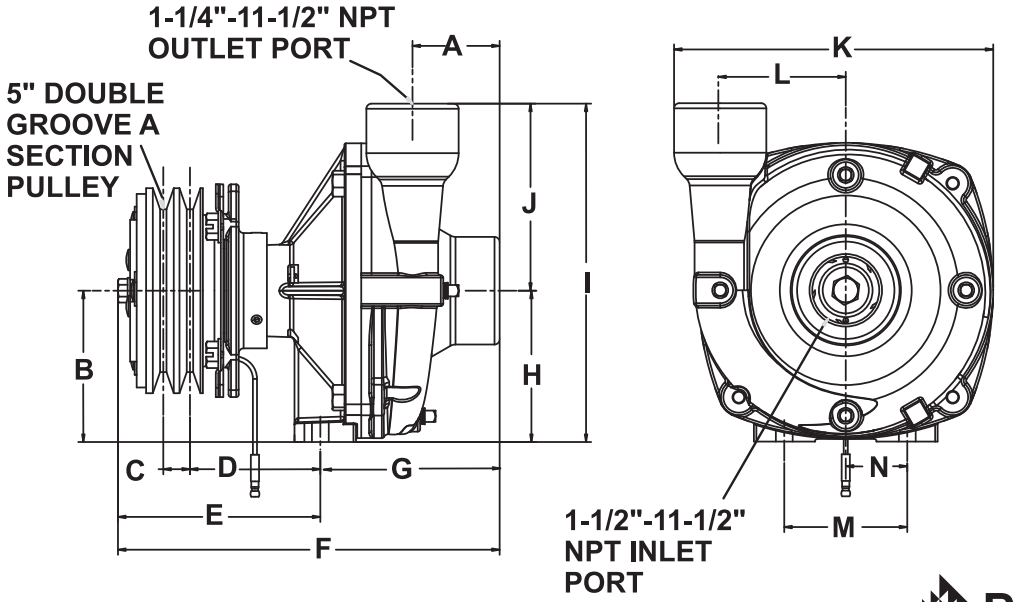

9263

Dimensions		
	Inches	mm
A	2.12	53.8
B	3.69	93.7
C	0.65	16.5
D	3.18	80.7
E	4.93	125.3
F	9.31	236.4
G	4.32	109.7
H	3.69	93.7
I	8.25	209.6
J	4.56	115.9
K	7.78	197.7
L	3.11	78.9
M	3	76.2
N	1.5	38.1

PENTAIR

Hypro (4/13)
Printed in USA

375 Fifth Avenue NW • New Brighton, MN 55112
Phone: (651) 766-6300 • 800-424-9776 • Fax: 800-323-6496
www.hypropumps.com